APPLIED ENGINEERING PRODUCTS

(909) 393- 9800 FAX (909) 606-5445
14325 Monte Vista, PO Box 926, Chino, CA 91710
valvebox@aepvalvebox.com
www.aepvalvebox.com

SERIES 1730-XG (8" HIGH) EXTENSION GREEN

- **22 PER PALLET**
- BOTTOM EXTENSION 1730 XG 12.00 LBS. 5.44 KG

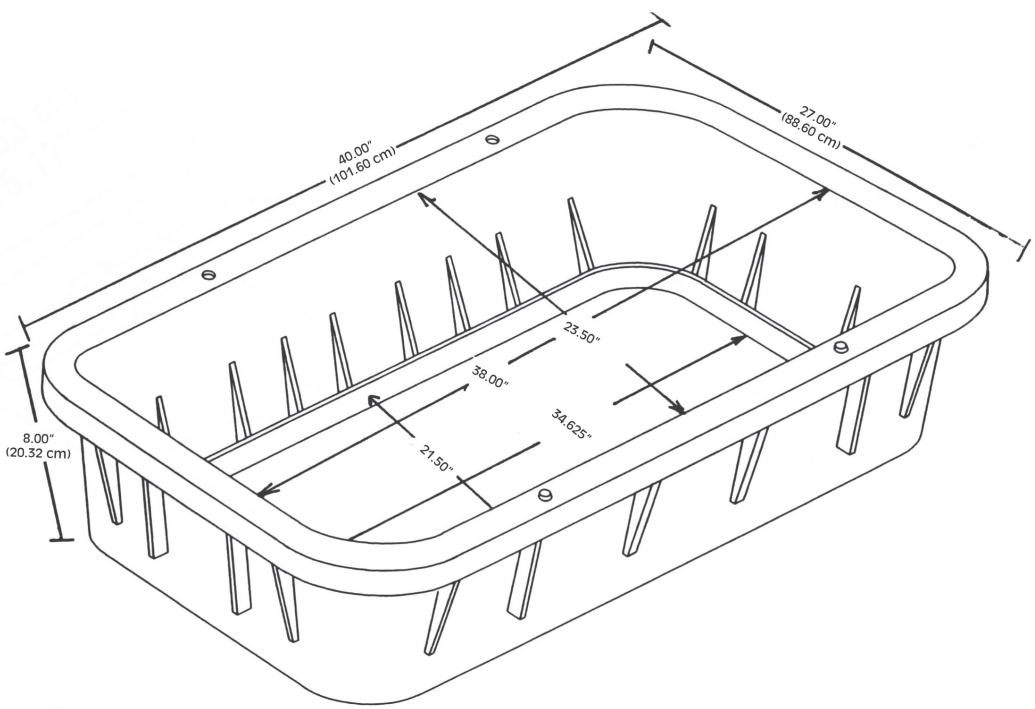

SPECIAL FEATURES

- HEAVY DUTY CONSTRUCTION
- 6 LOCATION HOLES & PINS FOR EASY ASSEMBLY
- PARTS WILL INTERLOCK TOP TO TOP OR BOTTOM TO BOTTOM TO INCREASE BOX DEPTH